Fax to +49 7143 373577

KOMET ® Easy Special

Order No. / Order date	Please state Customer No.	Signature	KOMET internal

Company:

Address:

Contact:

Department:

Phone:

Fax:

E-Mail:

☐ Order ☐ Inquiry

Quantity:

Material to be machined:

∅ D =

∅ D1 =

L1 = ☐ 2×D

☐ 3×D

☐ 4×D

α1 =

∅ d =

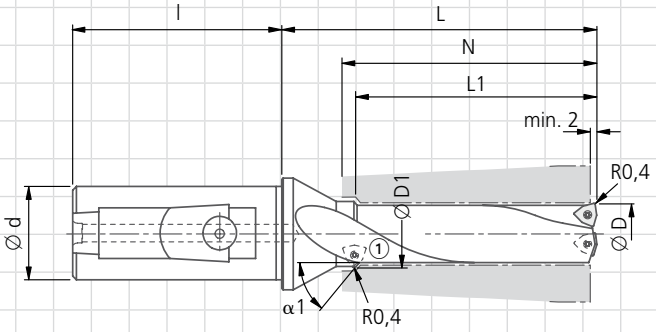

XV85...

N420006000

Please provide workpiece sketch!

Delivery consists of: Basic tool body. Insert not included.

This order is subject to the KOMET GROUP GmbH conditions of supply and payment.