Fax to +49 7143 373577

KOMET ® Easy Special

Order No. / Order date | Please state Customer No. | Signature | KOMET internal

Company:

Address:

Contact:

Department:

Phone:

Fax:

E-Mail:

☐ Order ☐ Inquiry

Quantity:

Material to be machined:

∅ D =

N =

∅ d =

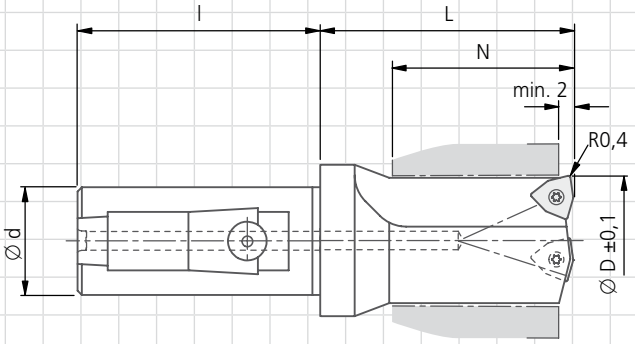

XV85...

N420071000

Please provide workpiece sketch!

Delivery consists of: Basic tool body. Insert not included.

This order is subject to the KOMET GROUP GmbH conditions of supply and payment.